# SELDÉN CX AND GX

## Furling systems for Code 0 and asymmetric spinnakers

SELDÉN
*for sailing*

*Photo: Billy Black*

## Want to see your crew smile?

**The power and acceleration achieved when unfurling a Code 0 or an asymmetric spinnaker is spectacular. It will make your sailing more fun.**

**Simply hoist the furled sail, release the furling line, pull on the sheet and you have added horse power to your sailing and given your crew a positive sailing experience. To douse the sail, ease the sheet, pull the continuous furling line and secure it in the purpose made Twin Cam block. Once the sail is furled it can be neatly dropped and coiled into a bag or left hoisted for later use. Seldén provide all necessary accessories for safe and carefree furling of "off-the-wind" sails.**

# The sails

### Code 0

The Volvo Ocean Race was the break through for the Code 0 concept, but lately the benefits of this type of sail have become recognized and appreciated also amongst ordinary sailors for the extra power it brings to light wind sailing. The luff is straight, set under tension and made for furling which simplifies the handling of this large sail. An AT-cable is integrated in the luff and fitted with thimbles in head and tack, and the entire luff length is furled simultaneously. The Code 0 is hoisted as high as the mast dimension permits and is tacked to the bow or to a sturdy bowsprit. The design is quite flat and reaches its maximum performance in apparent wind angles between 40° and 90°. Seldén CX is the right furler for this sail.

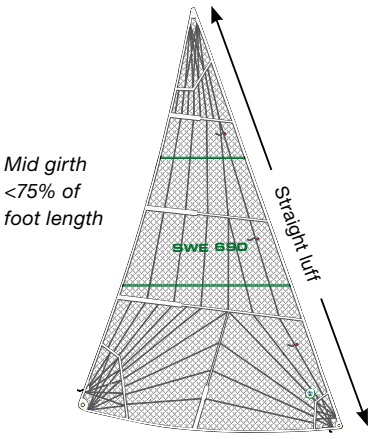


### Asymmetric spinnaker

This sail is often called "gennaker" or "cruising chute". The mid girth is >75% of the foot length and the sail is defined as a spinnaker in most international measurement rules. The luff is at least 2% longer than the leech and this is what makes the sail asymmetric. This sail is furled with a Seldén GX system and fitted at the tack to the swiveling tack attachment and at the head to the halyard swivel. An AT-cable connects the drum and the halyard swivel and transmits the rotation of the drum enabling the furling to start at the top and work its way down until the entire sail is stowed away. This is called top-down furling. The Seldén GX furler is fitted to the bow of the boat or preferably on a retractable Seldén bow sprit to expose the sail to the wind and to get clearance from the forestay. The halyard tension is moderate and the sail is hoisted using the spinnaker halyard. This sail performs at its best in apparent wind angles between 70° and 110°.

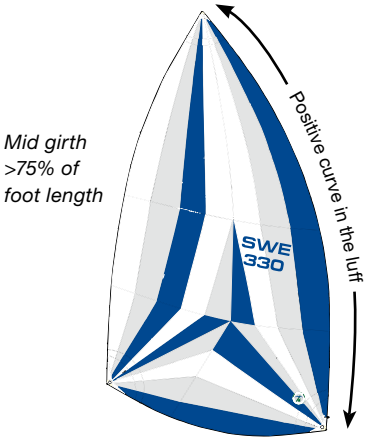

# The furlers

Seldén CX and Seldén GX are operated with an endless furling line running over a line driver drum. The furling line is preferably led all the way back to the cock pit and Seldén offer the Double Fairlead and the Twin-Cam block for a well organized set up. A purpose made AT-Cable has been developed to secure the function of the system and as the performance of top-down furling is dependant on the torsional rigidity of the AT-cable, it is included in the Seldén GX furlers.

- Metal ”teeth” in the drum make for a good grip on the line when furling the sail.
- A wedge in the line guide separates the line from the drum when unfurling the sail and the drum spins freely.
- Sealed steel bearing in the drum and in the halyard swivel for long service life.
- Rubber fender prevents the halyard swivel from chafing the mast while hoisting the furled sail.
- CX. Spring loaded lock makes it easy to connect the thimbles to the drum and the halyard swivel.
- GX. Patented line lock for easy mounting of the AT-Cable to the drum and to the halyard swivel.
- All structural parts are made of high-strength Duplex stainless steel. This means reduced material and low weight.
- Non-structural parts are made of impact resistant glass fibre reinforced polyamide composite.

*Seldén retractable bowsprit and Seldén GX. A perfect match.*

*Photo: Niklas Axhede*

### Seldén GX, for top-down furling of an asymmetric spinnaker/gennaker

Seldén GX drum and halyard swivel and an AT-cable is included in the kit. The drum and the halyard swivel are permantly fitted to the sail with the Seldén line lock. Connect the drum to the bow and the spinnaker halyard to the halyard swivel. Lead the furling line to the cockpit by using Seldén Double Fairleads on the stanchions, tighten the furling line and secure it in the Twin-Cam block. Thereafter hoist the furled sail.

| Seldén GX | Kit including GX drum, halyard swivel and AT-Cable Art. No. 1+2+3 | Max length of the system | Drum size, Ø mm | Dimension of included AT-cable, Ø mm | Max suggested sail area m² | Max working load, kN |
|---|---|---|---|---|---|---|
| GX7.5 | 545-018-21 | 13000 | 105 | 9 | 50 | 7.5 |
| | 545-018-22 | 16000 | | | | |
| | 545-018-23 | 19000 | | | | |
| GX10 | 545-118-21 | 13000 | 120 | 11 | 80 | 10 |
| | 545-118-22 | 16000 | | | | |
| | 545-118-23 | 19000 | | | | |
| | 545-118-24 | 22000 | | | | |
| GX15 | 545-218-21 | 16000 | 150 | 13 | 115 | 15 |
| | 545-218-22 | 19000 | | | | |
| | 545-218-23 | 22000 | | | | |
| | 545-218-24 | 25000 | | | | |
| | 545-218-25 | 28000 | | | | |
| GX25 | 545-418-21 | 19000 | 190 | 15 | 200 | 25 |
| | 545-418-22 | 22000 | | | | |
| | 545-418-23 | 25000 | | | | |
| | 545-418-24 | 28000 | | | | |

## Selden CX, for Code 0

The AT-cable is integrated in the luff of the sail and thimbles connect the luff to the drum and to the halyard swivel. Special Cable clamps are required to fit the thimbles to the Seldén AT-cable. A dedicated halyard for Code 0 is required and 2:1 purchase is recommended to obtain the required luff tension and to reduce the load on the halyard sheave and on the line stoppers. The drum and the furling line can be permanently mounted to the bow and along the stanchions.

| Seldén CX | Kit including drum and halyard swivel Art. No. 1+2 | Drum size, Ø mm | Safe working load, kN | Max suggested sail area, $m^2$ | Max RM at 30° heel, kNm | Approx. displacement, tonnes |
|---|---|---|---|---|---|---|
| CX10 | 545-010-10 | 105 | 10 | 50 | 25 | 5 |
| CX15 | 545-100-10 | 120 | 15 | 80 | 45 | 7,7 |
| CX25 | 545-200-10 | 150 | 25 | 115 | 90 | 14 |
| CX45 | 545-433-10 | 190 | 45 | 200 | 200 | 28 |

*A Seldén CX15 Code 0 furler and a Race80 Bowsprit from Båtsystem, Sweden. www.batsystem.se. The luff load on a Code 0 is more than the double compared to an asymmetric spinnaker. Therefore, a sturdy bowsprit is required.*

*Photo: Tjelvar Eriksson*

## Seldén CX, for top-down furling of an asymmetric spinnaker/gennaker

*This is an alternative to GX allowing the drum and the furling line to be mounted permanently. Snap in the furled gennaker and hoist it using the spinnaker/gennaker halyard.*

A Seldén CX drum is combined with a Free Tack Adapter and a GX halyard swivel, both of them with Seldén line lock. The furled sail with the Adapter is connected to the drum and the sail is hoisted with the spinnaker halyard. The drum and the furling line can be permanently mounted to the bow and along the stanchions.

| Seldén CX | CX drum Art. No. (2) | Kit including Free Tack Adapter & GX halyard swivel Art. No. (1+3) | AT-cable Dimension, Ø mm | This combination equals… | Max suggested sail area, m² |
|---|---|---|---|---|---|
| CX10 | 545-010-11 | 545-028-10 | 9 | GX7.5 | 50 |
| CX15 | 545-100-11 | 545-128-10 | 11 | GX10 | 80 |
| CX25 | 545-200-11 | 545-228-10 | 13 | GX15 | 115 |
| CX45 | 545-433-11 | 545-428-10 | 15 | GX25 | 200 |

## Seldén CX, for Code 0 & top-down furling of an asymmetric spinnaker/gennaker

*This is an all-in-one solution for the sailor using both Code 0 and gennaker and prefers using one halyard for both applications.*

A Seldén CX drum and halyard swivel for thimbles are used both for the Code 0 sail and an additional gennaker. Connect the sail suitable for the prevailing conditions to the drum and to the halyard swivel and hoist the furled sail using the Code 0 halyard. The Free Tack Adapter is permanently fitted to the tack of the asymmetric spinnaker/gennaker with the Seldén line lock. The drum and the furling line can be permanently mounted to the bow and along the stanchions.

| Seldén CX | CX drum and halyard swivel Art. No. (1+2) | Adapter Art. No. (3) | AT-cable Dimension, Ø mm | This combination equals… | Max suggested sail area of the gennaker, m² |
|---|---|---|---|---|---|
| CX10 | 545-010-10 | 545-028-11 | 9 | GX7.5 | 50 |
| CX15 | 545-100-10 | 545-128-11 | 11 | GX10 | 80 |
| CX25 | 545-200-10 | 545-228-11 | 13 | GX15 | 115 |
| CX45 | 545-433-10 | 545-428-11 | 15 | GX25 | 200 |

# Accessories

## Seldén AT-Cables (Anti-Torsion)

The more torsional rigid AT-cable, the quicker and safer the sail will furl. Seldén provide the most rigid cable on the market, three times more rigid than the second best, and it is included in the Seldén GX kit.

| Art. No. | Length, mm | Dimension, Ø mm | To be used for... |
|---|---|---|---|
| 613-020-01<br>613-020-02<br>613-020-03 | 13000<br>16000<br>19000 | 9 | CX10<br>CX15<br>GX7,5<br>CX10 + GX7,5 adapter |
| 613-021-01<br>613-021-02<br>613-021-03<br>613-021-04 | 13000<br>16000<br>19000<br>22000 | 11 | CX25<br>GX10<br>CX15 + GX10 adapter |
| 613-022-01<br>613-022-02<br>613-022-03<br>613-022-04<br>613-022-05 | 16000<br>19000<br>22000<br>25000<br>28000 | 13 | GX15<br>CX25 + GX15 adapter |
| 613-023-01<br>613-023-02<br>613-023-03<br>613-023-04 | 19000<br>22000<br>25000<br>28000 | 15 | CX45<br>GX25<br>CX45 + GX25 adapter |

## Endless furling line

| Art. No. Line only | Art. No. Line with Twin cam block installed | Length, mm | Dimension, Ø mm | To be used for... |
|---|---|---|---|---|
| 611-007-06<br>611-007-07<br>611-007-09<br>611-007-08 | 611-007-31<br>611-007-32<br>611-007-33<br>611-007-34 | 2 x 4000<br>2 x 8000<br>2 x 10000<br>2 x 12000 | 8 | CX10<br>CX15<br>GX7,5<br>GX10 |
| 611-011-05<br>611-011-06<br>611-011-07<br>611-011-18<br>611-011-19 | 611-011-31<br>611-011-32<br>611-011-33<br>611-001-34<br>611-011-35 | 2 x 5000<br>2 x 7000<br>2 x 9000<br>2 x 12000<br>2 x 15000 | 10 | CX25<br>GX15 |
| 611-015-06<br>611-015-07<br>611-015-08<br>611-015-09 | 611-015-31<br>611-015-32<br>611-015-33<br>611-015-34 | 2 x 5000<br>2 x 9000<br>2 x 12000<br>2 x 17000 | 12 | CX45<br>GX25 |

## Unique and patented line lock system

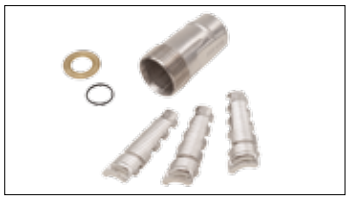

*Line terminal with a conical shape. Set of wedges.*

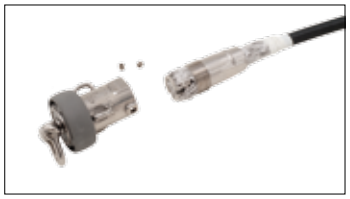

*Pull the terminal over the line and fold the core of the line over the wedges. Insert the wedges to the terminal.*

*Install the drum/halyard swivel and tighten the locking screw.*

*Twin cam block for furling line*
*PBB50 Art. No. 405-001-40R*
*(max Ø10 mm line)*
*PBB60 Art. No. 406-001-40R*
*(Ø12 mm line)*

## Double Fairlead

Ordinary blocks cannot be used to lead the endless furling line back to the cockpit. Seldén Double Fairlead consist of a composite bracket fitted to a 25 mm or 30 mm stanchion and a spring loaded ”push-and-twist” bracket in stainless steel. Easy to open to attach the line and just as easy to close. The Double Fairlead prevents the line to get tangled up and the smooth stainless bracket prevents friction.
Art. No. 480-501-01R.

## Code 0 halyard with 2:1 purchase

To boost the performance when using a Code 0, the halyard load must be higher than what normal halyard boxes and stoppers can handle. Therefore, a 2:1 purchase needs to be arranged by fixing the dead end of the halyard in the mast and letting it run through a block attached to the halyard swivel. Position on the mast must be specified by Seldén. In most cases Code 0 sails need to be hoisted lower than gennakers and spinnakers.

## Block for 2:1 purchase

| Art. No. | Dim. | Weight, g | $L^1$ | $L^2$ | W | D | Safe working load, kg | Breaking load, kg | Max line size, mm | To be used for... |
|---|---|---|---|---|---|---|---|---|---|---|
| 403-501-01R | 30 | 130 | 66 | 21 | 13 | 8 | 1500 | 3000 | 10 | CX15 |
| 404-501-01R | 40 | 245 | 83 | 26 | 18 | 10 | 2500 | 5000 | 12 | CX25, GX25 |
| 405-501-01R | 50 | 505 | 104 | 31 | 24 | 12 | 4000 | 8000 | 16 | CX45 |

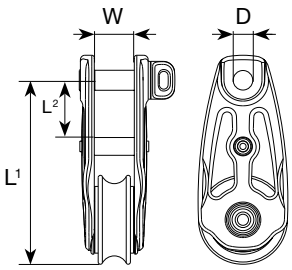


## Dead end fitting

| Art. No. | Mast section | Max rope, Ø mm | Max RM at 30° heel, kNm |
|---|---|---|---|
| 508-843-01 | C156-F228 | 12 | 45 |
| 508-844-01 | C245-F305 | 14 | 180 |
| 508-838-01 | C321-F406 | 16 | 350 |

## Thimbles for AT-cable

| Art. No. (2 pcs) | For AT-Cable, Ø mm | To be used for... |
|---|---|---|
| 545-114-01 | 8-9 | CX10, CX15 |
| 545-116-01 | 10-11 | CX10, CX15 |
| 545-214-01 | 10-11 | CX25 |
| 545-216-01 | 12-13 | CX25 |
| 545-416-01 | 14-16 | CX45 |

## Cable clamps

To fit thimbles to the Seldén AT-cable. Heat shrink tubing included.

| Art. No. (2 pcs) | For AT-Cable, Ø mm |
|---|---|
| 301-311-01 | 9-11 |
| 301-312-01 | 12-13 |
| 301-313-01 | 14-15 |

*For CX25 and CX45 double clamps at each end of the AT-cable are required.*

## Adapters

An adapter adds a tack swivel to a CX furler. The CX drum can now be used both for Code 0 and for asymmetric spinnaker/gennaker. The adapters feature the patented Seldén line lock and Torlon ball bearings.

| Art. No. | Converts... | ...to |
|---|---|---|
| 545-028-11 | CX10 | GX7.5 |
| 545-128-11 | CX15 | GX10 |
| 545-228-11 | CX25 | GX15 |
| 545-428-11 | CX45 | GX 25 |

## Low friction shackle

This snap shackel has a big, well rounded loop allowing the rope to slide with low friction and it can be used to tension a Seldén CX with 2:1 purchase. This not only makes for better performance but it also makes it easier to connect the Seldén CX to a bowsprit, from the foredeck. The shackle is made of high strength Duplex steel and has a quality mirror finish.

| Art. No. | Dimension | Weight, g | Safe working load, kg | Breaking load, kg | To be used for... |
|---|---|---|---|---|---|
| 307-435-01R | 50 | 70 | 900 | 1800 | CX10, GX7,5, GX10 |
| 307-436-01R | 60 | 118 | 1500 | 3000 | CX15, GX15 |
| 307-437-01R | 80 | 278 | 2500 | 5000 | CX25, GX25 |
| 307-438-01R | 100 | 540 | 4000 | 8000 | CX45 |

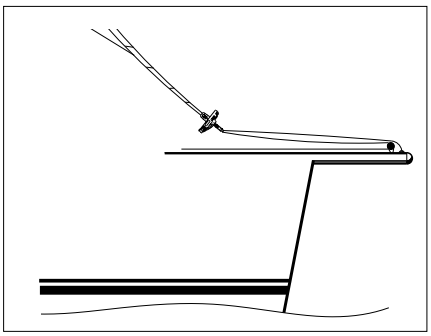

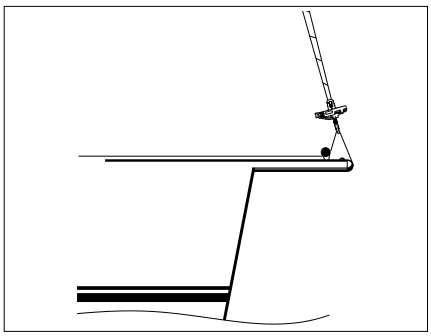

## Anti-Twist shackle

The Anti-Twist shackle is an optional shackle connecting the halyard to the halyard swivel. The long pin will lean against the mast and prevent a “soft” halyard from twisting.

This shackle is not necessary for a 2:1 halyard set up nor is it for a high quality Dyneema® halyard.

| Art. No. | Dimension | To be used for... |
|---|---|---|
| 545-030-01R | M6, L = 220 mm | CX10, GX7.5, GX10 |
| 545-130-01R | M8, L = 220 mm | CX15, GX15 |
| 545-230-01R | M10, L = 280 mm | CX25, GX25 |
| 545-430-01R | M12, L = 390 mm | CX45 |

## Adjustable Tack Swivel (ATS)

This accessory for Seldén GX furlers enables the sailor to easily trim the luff of the gennaker. The Adjustable Tack Swivel slides up and down over the AT-cable and is handled from the cockpit with a down haul. As opposed to trimming the luff by slacking the halyard, the AT-cable can now be permanently tensioned and always ready for furling.

| Art. No. | To be used for... |
|---|---|
| 545-040-10 | GX7.5 |
| 545-140-10 | GX10 |
| 545-240-10 | GX15 |
| 545-440-10 | GX25 |

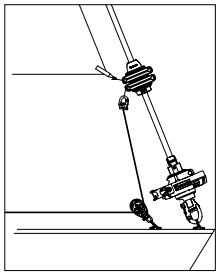

*The sliding sleeve of ATS consists of two halves and therefore it is easy to retrofit the swivel on an AT-cable.*

597-200-E 2014-10-10 Printed in Sweden.

***SELDÉN and FURLEX are registered trademarks of Seldén Mast AB***
***Seldén Mast AB, Sweden*** *e-mail info@seldenmast.com, www.seldenmast.com*

SELDÉN
*for sailing*